TECO	OUTLINE DIMENSIONS 3-PHASE INDUCTION MOTOR	FRAME NO : D90S

POLE	kW	HP	RPM	FRAME
2	2.20	2.95	2870	D90S-2
6	0.70	0.94	910	D90S-6
8	0.37	0.50	700	D90S-8

Totally Enclosed Fan-Cooled Type, Squirrel-Cage Rotor.

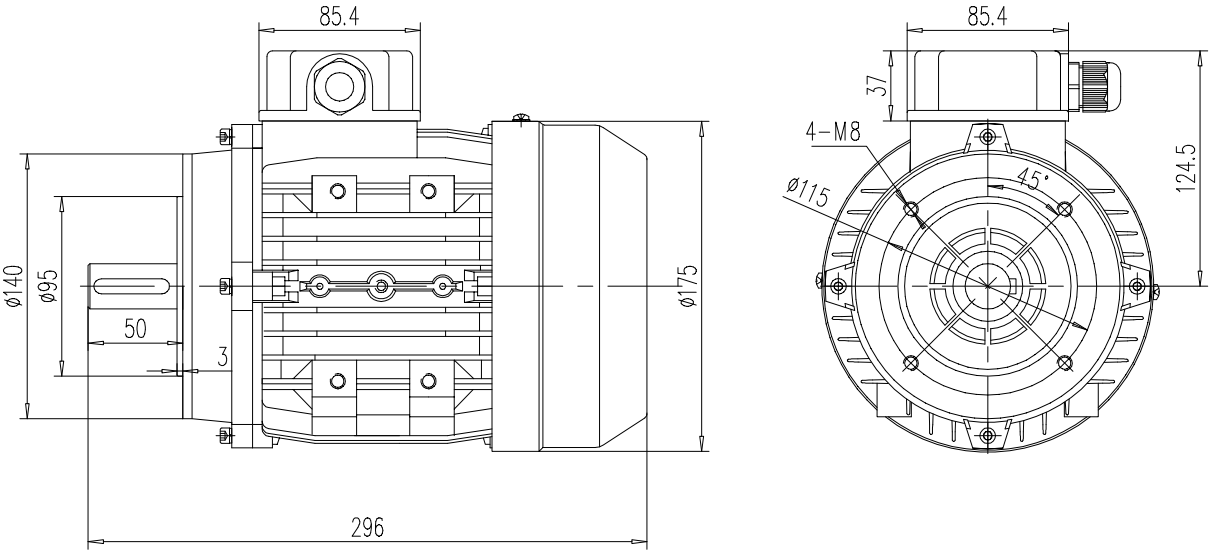

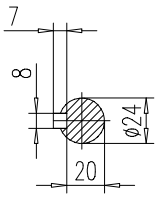

NOTES:

1. DIMENSIONS IN mm.
2. SCALE 1: 4.
3. C-FLANGE MOUNTED IM3601.
4. FOR DIRECT DRIVE ONLY.
5. IP55 PROTECTION.

MAX ALLOY

DWN.	DP	16. 12. 24	REV : 00
CHKD.	AN	16. 12. 24	
APPD.	JC	16. 12. 24	